RE4F03V / RE4F04V / 4F20E / JF403E

FWD 4 Speed

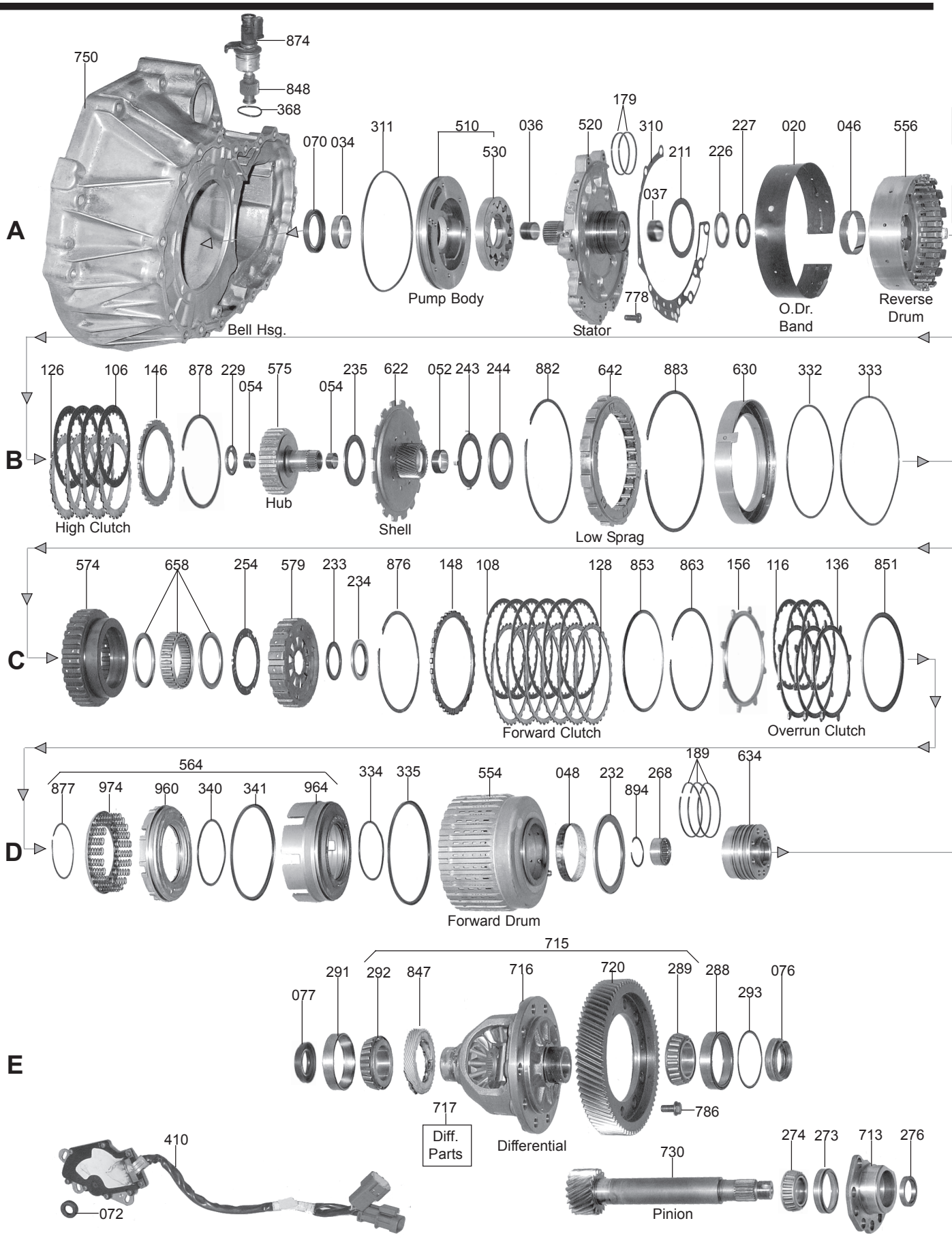

000 P&R Kit

002 OHK Kit

004 Master L/Steels

006 Master W/Stee Kit

011 Filter Kit

030 Bushing Kit

165 V.B. Kit

175 Ring Kit

400 Tech Manual

NISSAN

© WIT

RE4F03V / RE4F04V / 4F20E / JF403E

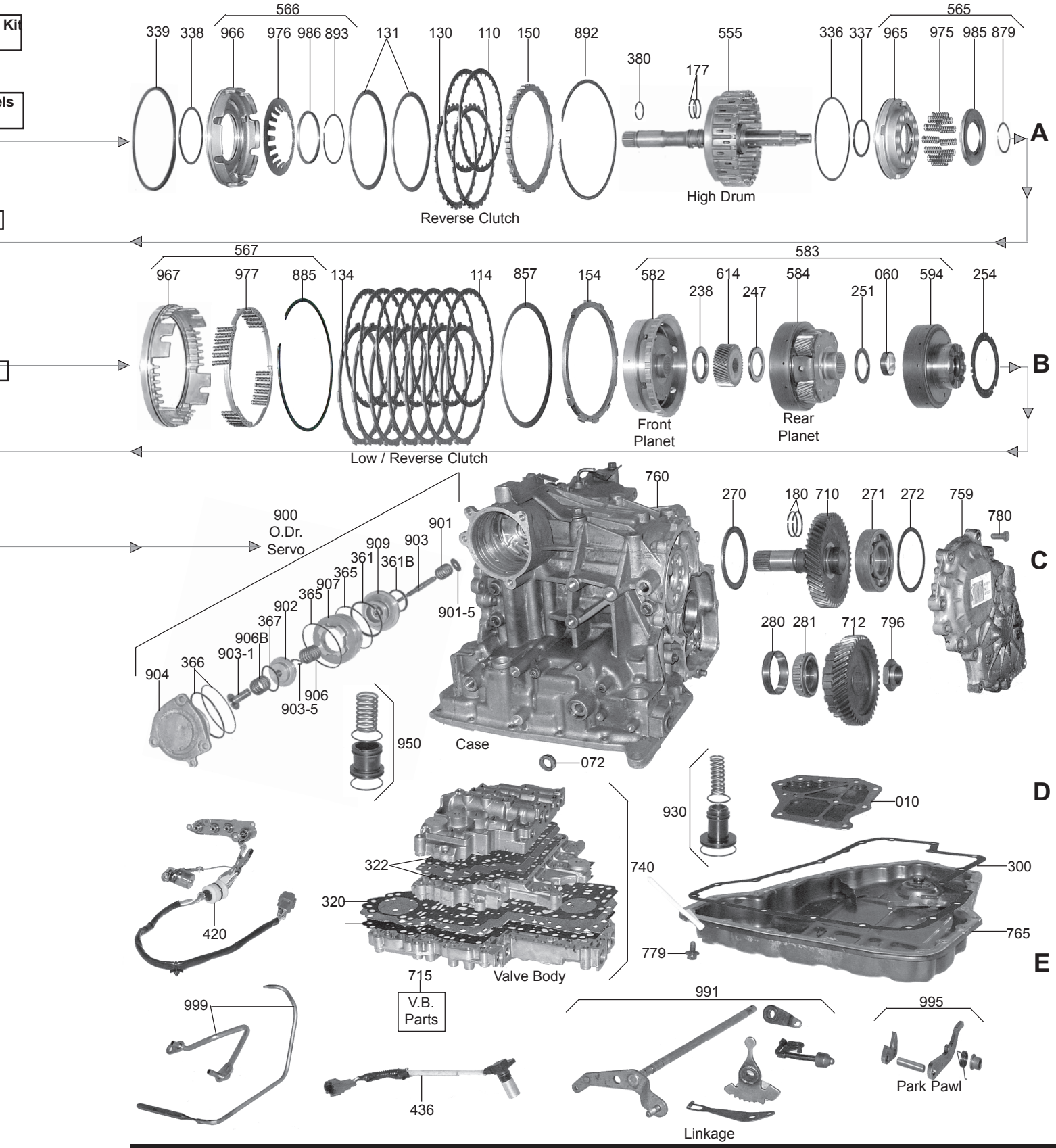

© WIT

Ganzeboom Transmission Parts & Torque converters