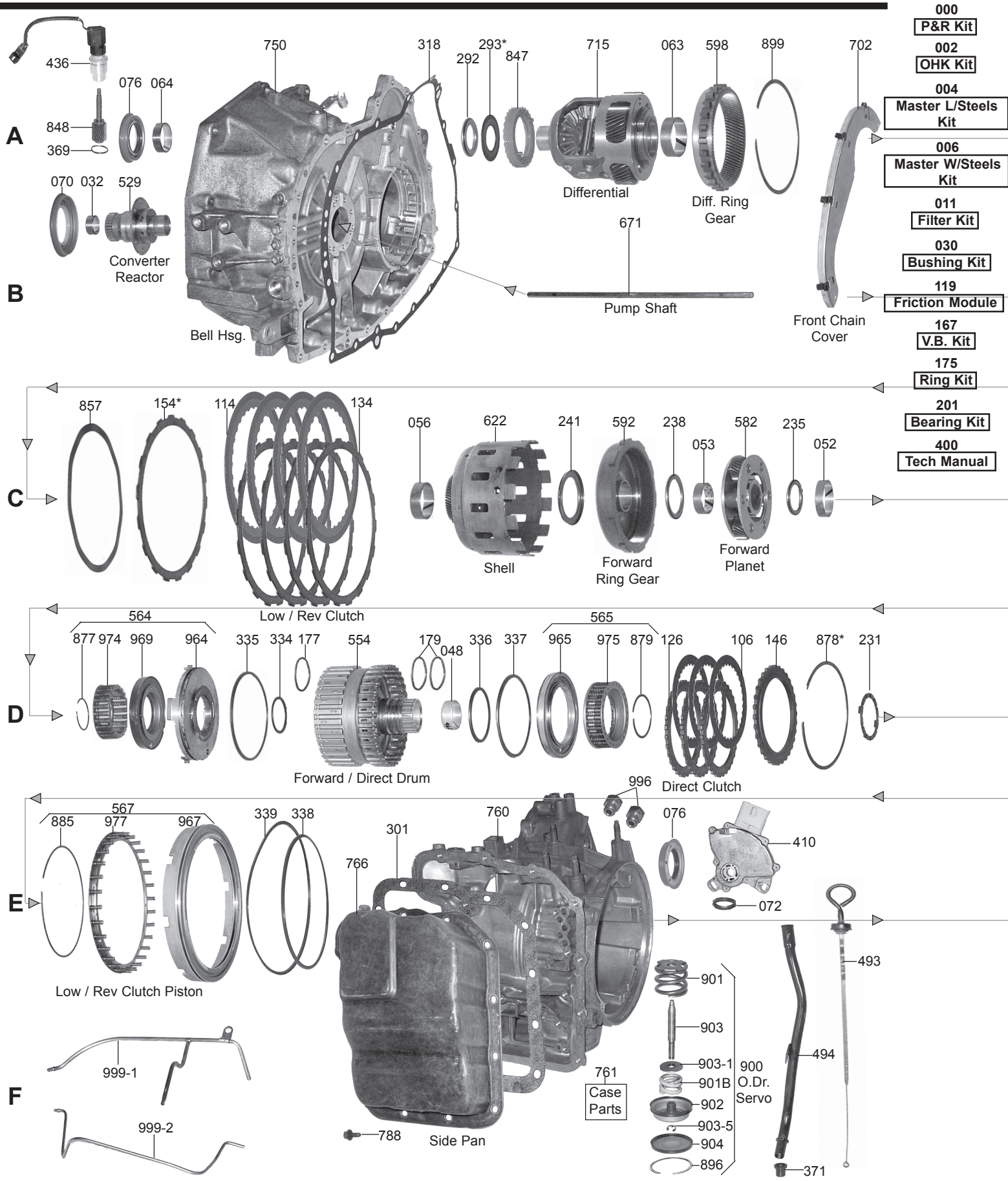

000 P&R Kit
002 OHK Kit
004 Master L/Steels Kit
006 Master W/Steels Kit
011 Filter Kit
030 Bushing Kit
119 Friction Module
167 V.B. Kit
175 Ring Kit
201 Bearing Kit
400 Tech Manual

FORD

© WIT

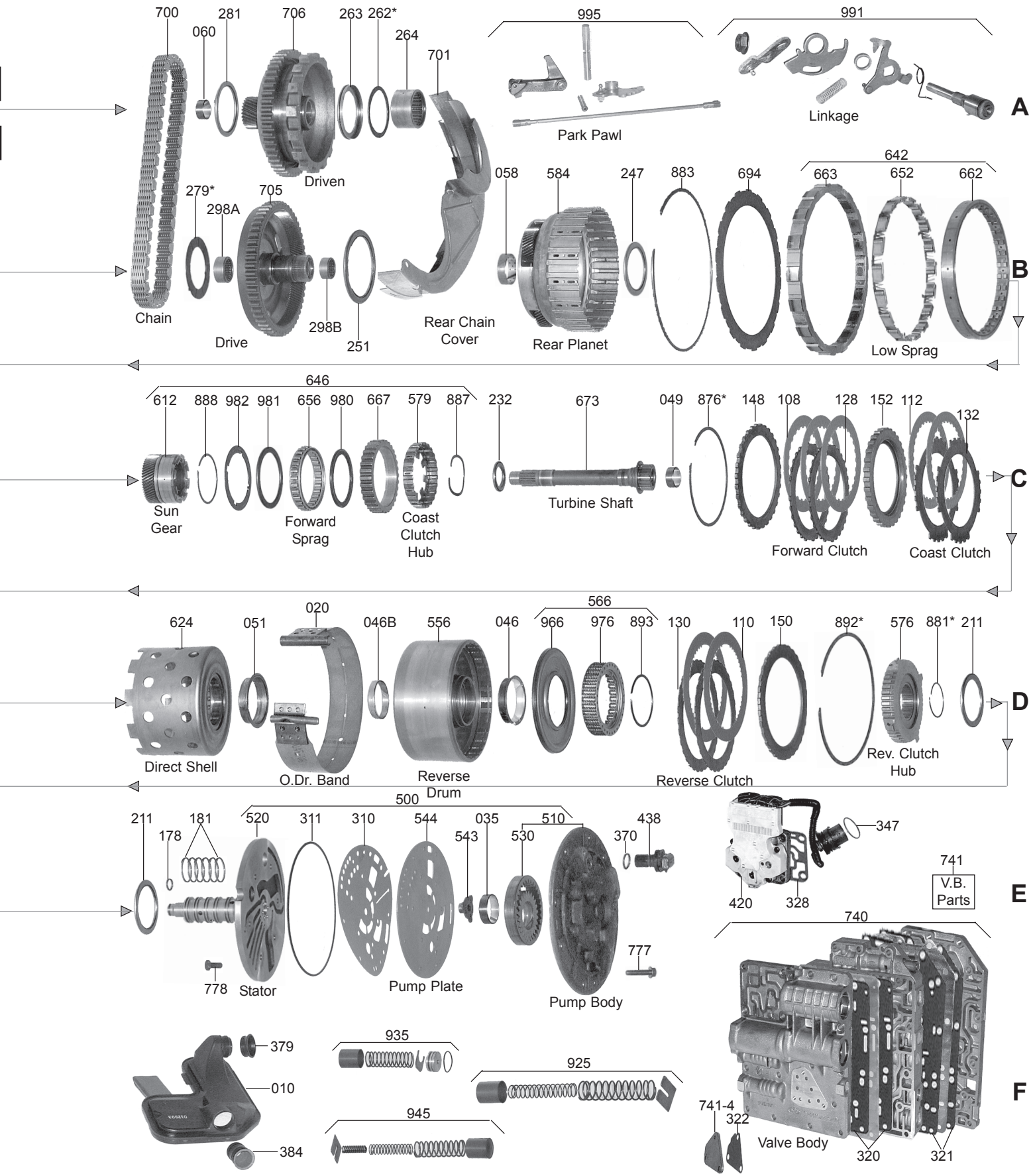
700
281
060
706
263
262*
264
701
995
991
Park Pawl
Linkage
A
Driven
279*
298A
705
058
584
247
883
694
642
663
652
662
B
Chain
Drive
298B
251
Rear Chain Cover
Rear Planet
Low Sprag
646
612
888
982
981
656
980
667
579
887
232
673
049
876*
148
108
128
152
112
132
C
Sun Gear
Forward Sprag
Coast Clutch Hub
Turbine Shaft
Forward Clutch
Coast Clutch
624
051
020
046B
556
046
566
966
976
893
130
110
150
892*
576
881*
211
D
Direct Shell
O.Dr. Band
Reverse Drum
Reverse Clutch
Rev. Clutch Hub
211
181
178
500
520
311
310
544
035
543
510
530
438
370
347
741
V.B. Parts
E
420
328
740
777
778
Stator
Pump Plate
Pump Body
379
935
925
010
945
741-4
322
F
384
Valve Body
320
321

© WIT